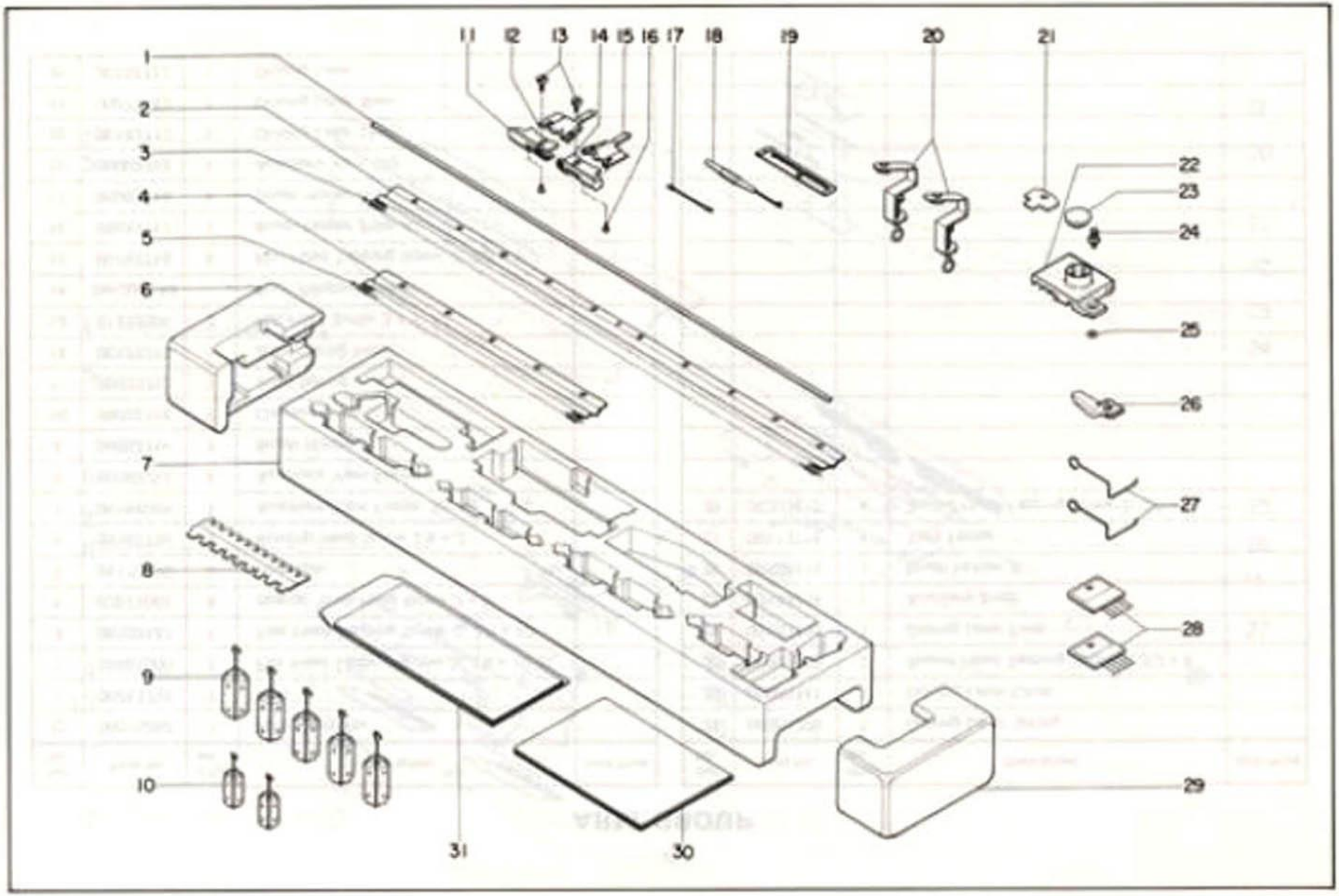
1
2
3
4
5
6
7
8
9
10
11
12
13
14
15
16
17
18
19
20
21
22
23
24
25
26
27
28
29
30
31

ACCESSORY GROUP

Ref. No.	Parts No.	Q'ty/set	Description	Unit Price
1	17194317	1	Close Knit Bar	
2	07015282	1	Cast on Comb (long)	
3	07797004	1	Cast on Comb Wire (long)	
4	07025281	1	Cast on Comb (short)	
5	07807001	1	Cast on Comb Wire (short)	
6	07263718	1	Side Cover (L)	
7	17243718	1	Accessory Container	
8	07055288	1	Needle Pusher (2/1 – 2/2)	
9	07074008	5	Ribber Weight (Large)	
10	07094006	2	Ribber Weight (small)	
O	02045284	1	Auxiliary Piece (L) Unit	
11	02065282	1	Auxiliary Piece (L)	
12	11663713	1	Ribber Joiner Stopper Plate (L)	
13	01933712	2	Ribber Joiner Screw	
O	02035285	1	Auxiliary Piece (R) Unit	
14	02055283	1	Auxiliary Piece (L)	
15	11653714	1	Ribber Joiner Stopper Plate (R)	
16	02106003	2	Truss Head Tapping Screw 2, 2.6 x 6	
17	07176001	1	Double-eye Transfer Tool	
18	07123714	1	Hook Tool	
19	07035280	1	Spare Needle Envelope (incl. 3 needles)	
20	07105448	2	Ribber Clamp	

Ref. No.	Parts No.	Q'ty/set	Description	Unit Price
21	07144009	1	Screw Driver	
O	07504004	1	P Carriage Complete (Ref. No.22 – 26)	
22	07404007	1	P Carriage	
23	07484009	1	P Carriage Cap	
24	17191206	1	P Carriage Knob	
25	07211204	1	P Carriage Snap	
26	07474000	1	P Carriage Presser	
27	07096441	2	Edge Weight Hook	
28	07283716	2	Hanger Comb	
29	07253719	1	Side Cover (R)	
30	07515281	1	Instruction Book	
31	07065287	1	Punch Card set	

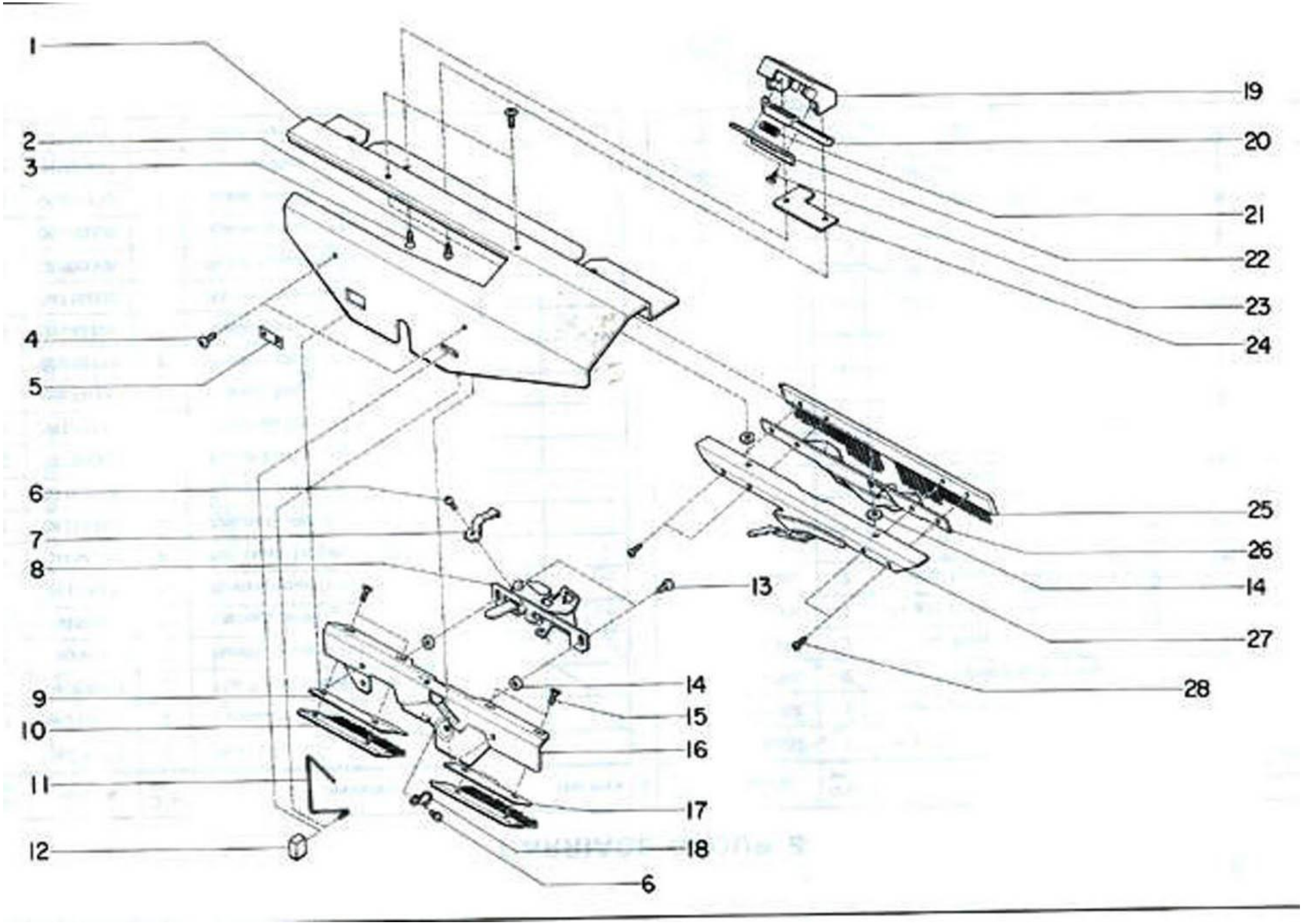
1
2
3
4
5
6
7
8
9
10
11
12
13
14
15
16
17
18
6
19
20
21
22
23
24
25
26
14
27
28

Ref. No.	Parts No.	Q'ty/set	Description	Unit Price
O	06015283	1	Arm Complete	
1	06013718	1	Arm	
2	05861000	1	Pan Head Tapping Screw 2, 2.6 x 10	
3	06103147	1	Flat Head Tapping Screw 2, 2.6 x 10	
4	02511061	4	Special Truss Head Screw 3 x 6	
5	06173710	1	Arm Seal	
6	06183719	2	Binding Head Screw 2.6 x 3	
7	06194005	1	Auxiliary Yarn Feeder Spring	
8	06083711	1	Auxiliary Yarn Feeder	
9	06053714	1	Brush Holder (L)	
10	06033716	2	Clearing Brush	
11	06073712	1	Joint Spring	
12	06173710	1	Joint Spring Knob	
13	01272004	2	Pan Head Screw 3 x 5	
14	See page 13		Plain Polished Washer	
15	06193718	4	Flat Head Tapping Screw 2, 2.3 x 8	
16	06023717	1	Brush Holder Plate A	
17	06043715	1	Brush Holder (R)	
18	06063713	1	Auxiliary Yarn Clip	
O	06143713	1	Driving Lever Unit	
19	06073142	1	Driving Lever Base	
20	06153712	1	Driving Lever	

Ref. No.	Parts No.	Q'ty/set	Description
21	04561205	1	Driving Lever Spring
22	06083141	1	Driving Lever Cover
23	06096002	2	Round Head Tapping Screw 2, 2.3 x 6
24	06163711	1	Driving Lever Plate
25	06133714	1	Auxiliary Brush
26	06123715	1	Brush Holder B
27	06113716	1	Yarn Feeder
28	06203715	4	Round Head Tapping Screw 2, 2.3 x 8

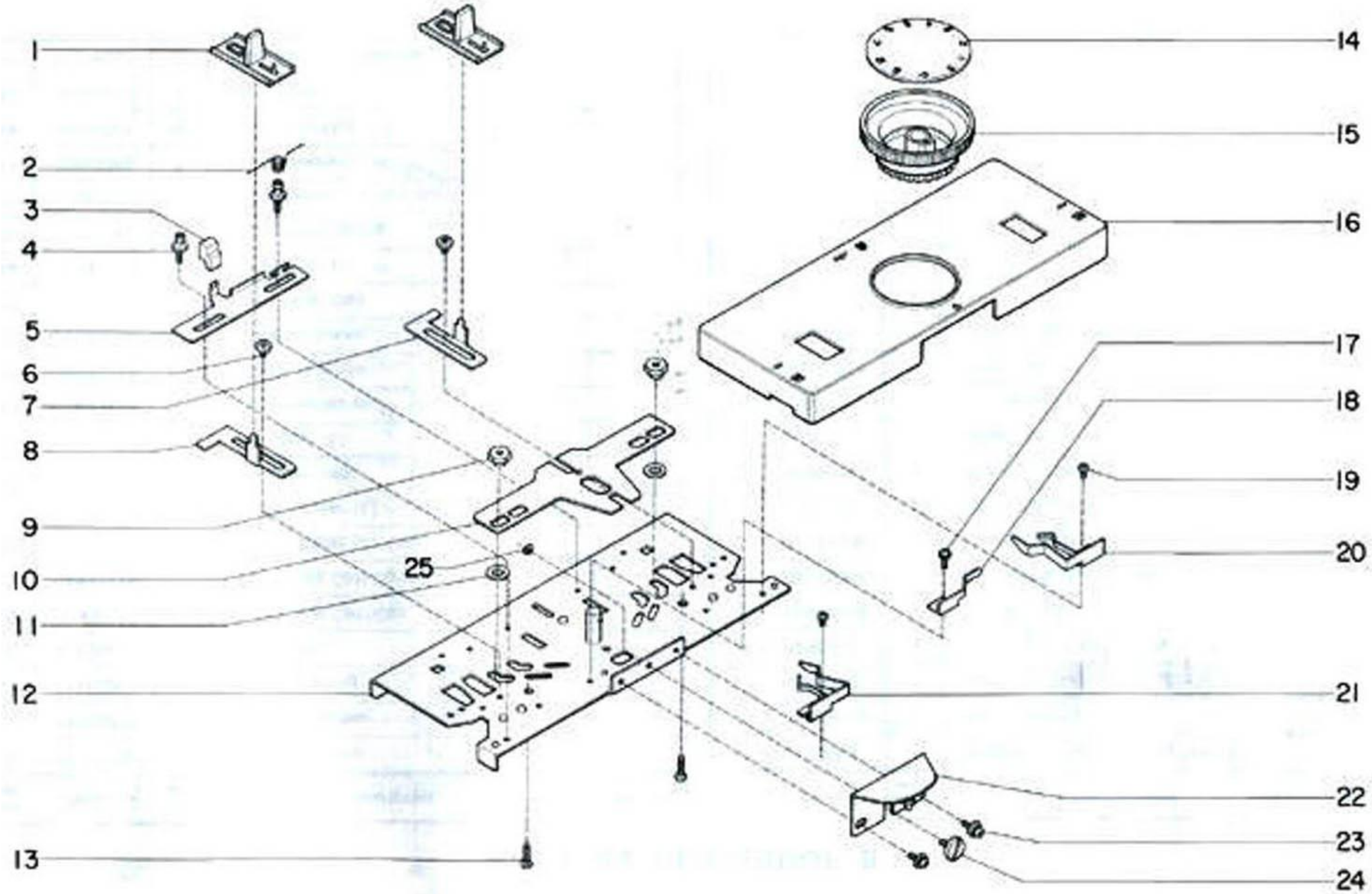
1
2
3
4
5
6
7
8
9
10
11
12
13
14
15
16
17
18
19
20
21
22
23
24
25

Ref. No.	Parts No.	Q'ty/ set	Description	Unit Price
O	05015284	1	Carriage Complete	
1	04095287	2	Set Lever Knob	
2	04372264	1	Pick Lever Spring	
3	04535282	1	Pick Lever Knob	
4	04436002	2	Pick Lever Screw	
5	04402269	1	Pick Lever	
6	04236006	2	Set Lever Screw	
7	04226007	1	Set Lever (L)	
8	04216008	1	Set Lever (R)	
9	14426001	2	Main Cam Nut	
10	14066005	1	Travelling Plate	
11	04804001	2	Plain Polished Washer 3.2 x 11 x 0.5	
12	04013710	1	Carriage Plate	
13	04296000	2	Pan Head Tapping Screw 2. 3 x 12	
14	04515284	1	Dial Indicator	
15	04525283	1	Stitch Dial	
16	04283719	1	Carriage Cover	
17	03792009	1	Special SW Pan Head Screw 3 x 5	
18	04173712	1	Dial Spring	
19	04266003	2	Pan Head Screw 3 x 3.5	
20	04256004	1	Set Lever Spring (L)	
21	04246005	1	Set Lever Spring (R)	

Ref. No.	Parts No.	Q'ty/ set	Description
22	04464004	1	Joint Stopper
23	03812005	2	SPW Pan Head Screw 3 x 8
24	04526000	1	Joint Stopper Shaft
25	08662116	1	E Snap Ring 3

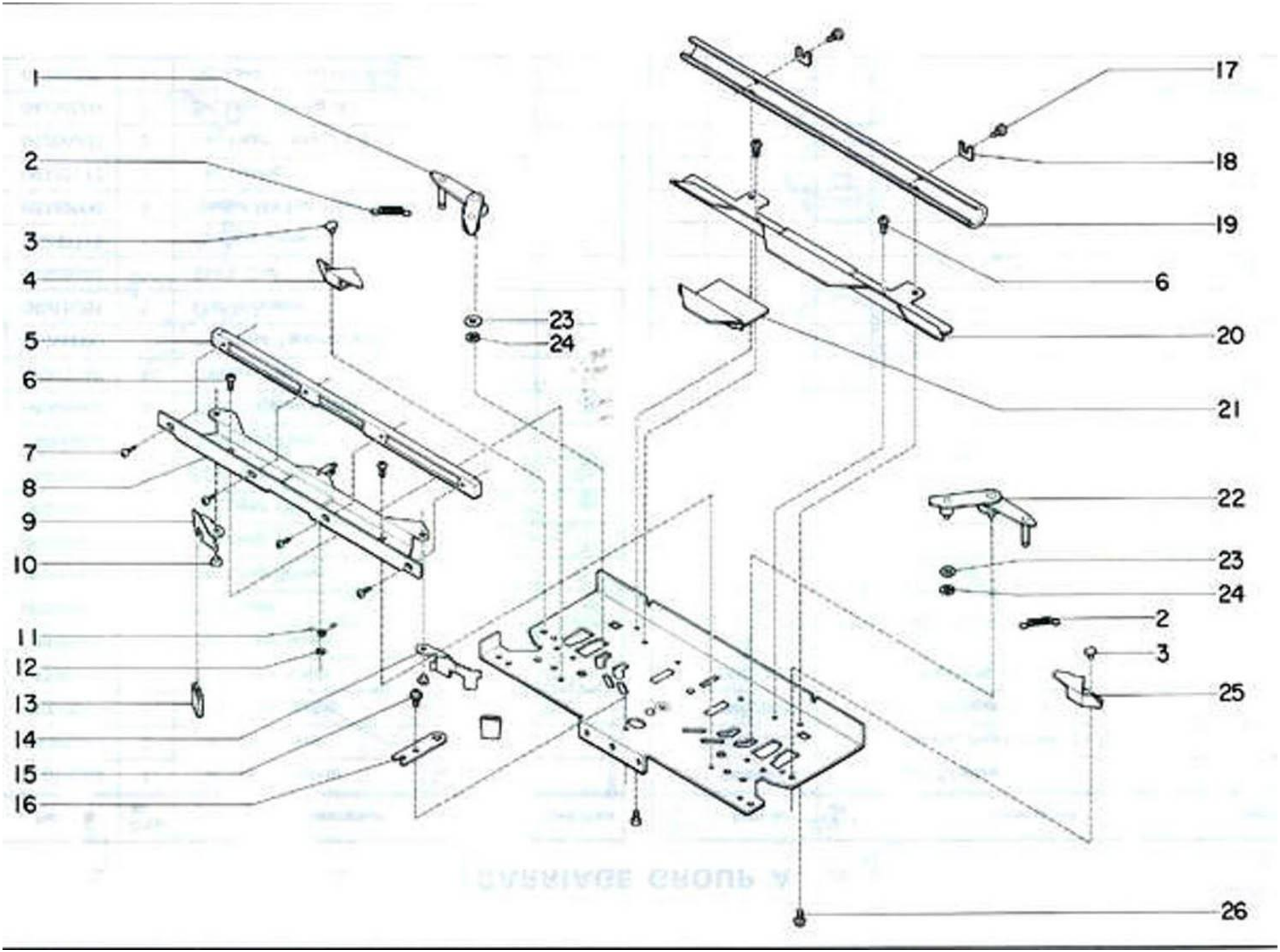
1
2
3
4
5
6
7
8
9
10
11
12
13
14
15
16
17
18
19
6
20
21
22
23
24
2
3
25
26
23
24

Ref. No.	Parts No.	Q'ty/ set	Description	Unit Price
1	04035283	1	Main Cam (L)	
2	05212451	2	Extension Spring	
3	04064002	2	Flat Fillister Head Rivet 2.6 x 5.5	
4	04054003	1	Needle Guide B (L)	
5	04446001	1	Carriage Slider	
6	01332006	4	Binding Head Screw 3 x 6	
7	04454310	4	Pan Head Tapping Screw 2, 2.6 x 5	
8	04113718	1	Needle Guide A	
9	04153714	1	Russel Cam (L)	
10	04166005	2	Russel Cam Rivet	
11	04173142	1	Lowering Cam Spring	
12	05811005	1	E Snap Ring 2.5	
13	05313713	2	Russel Cam Knob	
14	04143715	1	Russel Cam (R)	
15	04116000	1	PW Pan Head Screw 3 x 6	
16	04086005	1	Stitch Adjusting Plate	
17	04606000	2	Special Binding Head Screw 3 x 4	
18	05972153	2	Spacer (t=0.2)	
19	04592457	1	Carriage Pipe	
20	04276002	1	Guide Plate	

Ref. No.	Parts No.	Q'ty/ set	Description
21	04186003	1	Pick Cam
22	04025284	1	Main Cam (R)
23	04771002	2	Plain Polished Washer 4 x 8 x 0.5
24	09662116	2	E Snap Ring 3
25	04044004	1	Needle Guide B (R)
26	04616009	2	Special Binding Head Screw 3 x 4.8

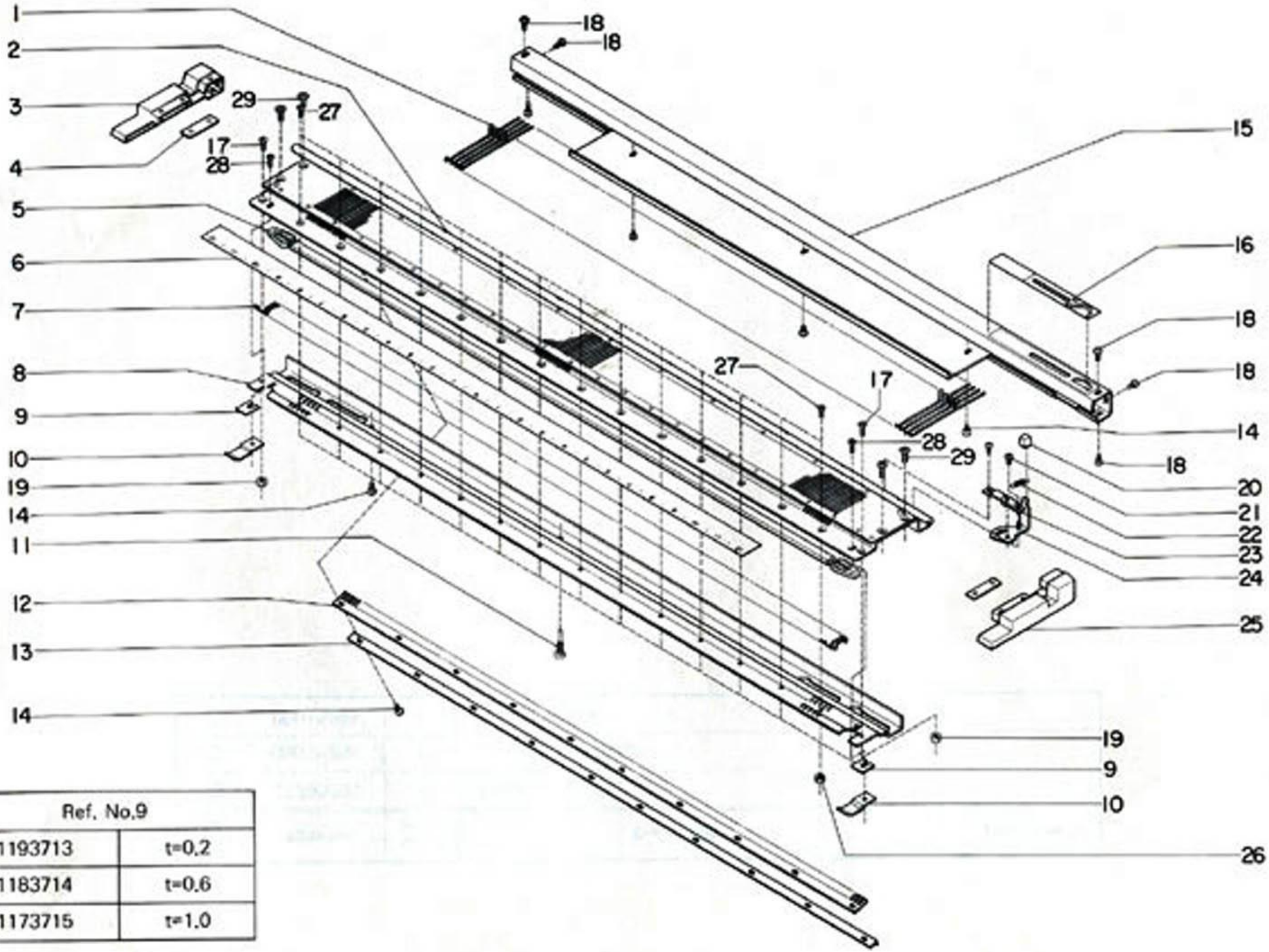

Ref. No.9	
01193713	t=0.2
01183714	t=0.6
01173715	t=1.0

Ref. No.	Parts No.	Q'ty/ set	Description	Unit Price
1	01105287	250	Latch Needle	
O	01205285	1	Needle Bed Unit No.1 (Ref. No.2, 7, 8, 17, 19, 26, 27)	
2	01215284	1	Needle Bed Unit No.2 (with Supporting Plate)	
3	12023719	1	Side Cover for Case (R)	
4	02072007	2	Needle Bed Fixing Plate	
5	11143716	1	Needle Retainer	
6	01115286	1	Vinyl Tape	
7	01075282	126	Sinker	
8	01065283	1	Sinker Plate	
9	inset		Washer for Ribber Stopper	
10	01163716	2	Ribber Stopper	
11	01195288	1	Needle Retainer Screw	
12	01095280	1	Leaf Spring	
13	01041003	1	Fixing Band	
14	01686005	14	Binding Head C Tap Tight Screw 3 x 6	
15	02013712	1	Main Cover for Case	
16	02515286	1	Shift Scale (SILVER-REED)	
	02525285	1	Shift Scale (SINGER)	
	02535284	1	Shift Scale (EMPISAL-KNITMASTER)	
	02545283	1	Shift Scale (STUDIO)	
17	01106004	2	Special Flat Head Screw 2.6 x 7	
18	02251205	6	Truss Head Tapping Screw 1, 3 x 8	

Ref. No.	Parts No.	Q'ty/ set	Description
19	01342005	2	Special Hexagonal Nut 2, 2.6
20	01433713	1	Half Pitch Lever Knob
21	04606000	2	Special Binding Head Screw 3 x 4
22	01293711	1	Half Pitch Lever Spring
23	01283712	1	Half Pitch Adjusting Plate
24	01185289	1	Half Pitch Lever Unit
25	12033718	1	Side Cover for Case (L)
26	03095262	14	Special Hexagonal Nut 2, 2
27	01285261	14	Special Flat Head Screw 2 x 7
28	01523711	2	Binding Head Screw 3 x 6
29	01292002	4	Special Flat Head STT Screw 4 x 10

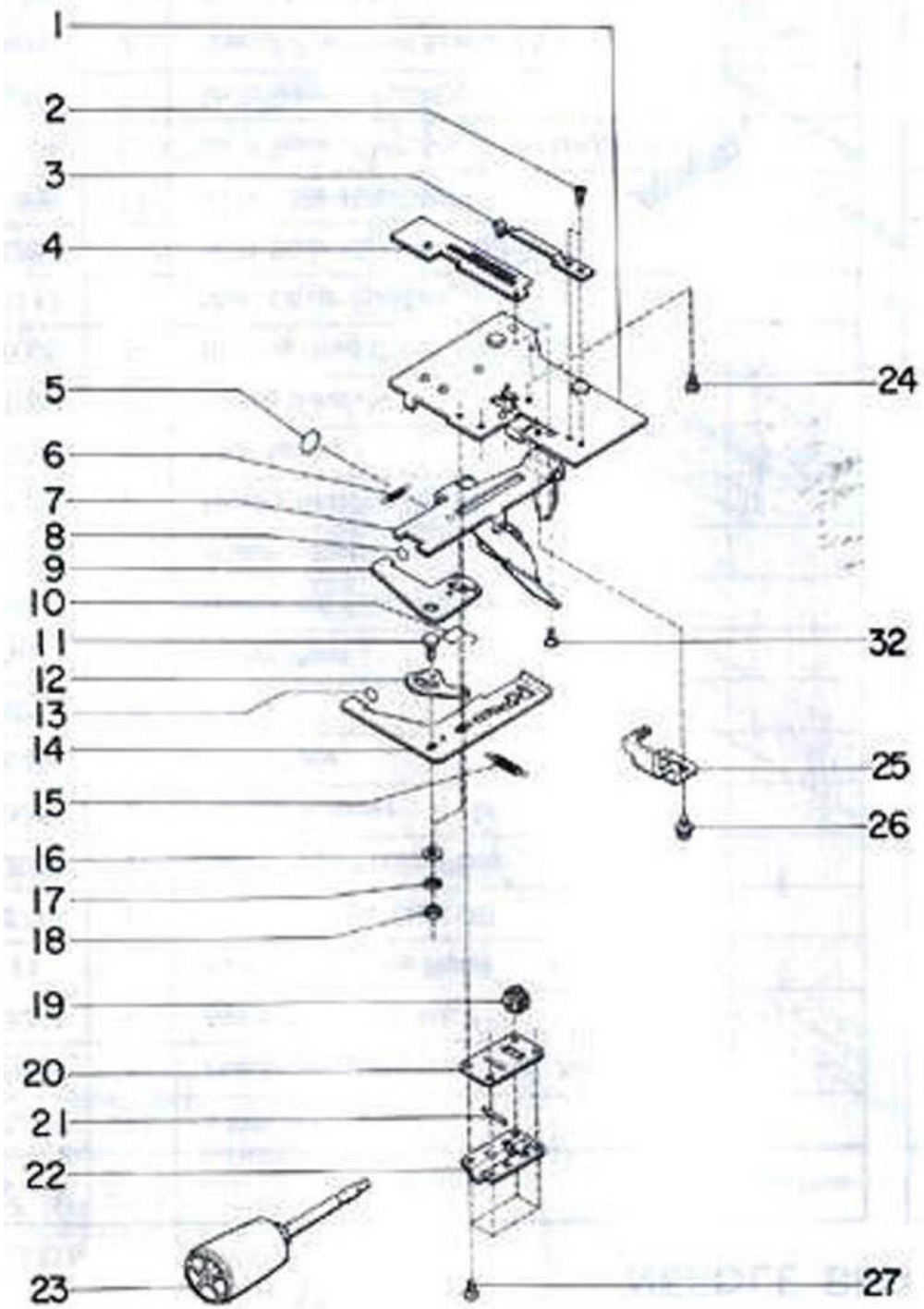
1
2
3
4
5
6
7
8
9
10
11
12
13
14
15
16
17
18
19
20
21
22
23
24
25
26
27
32

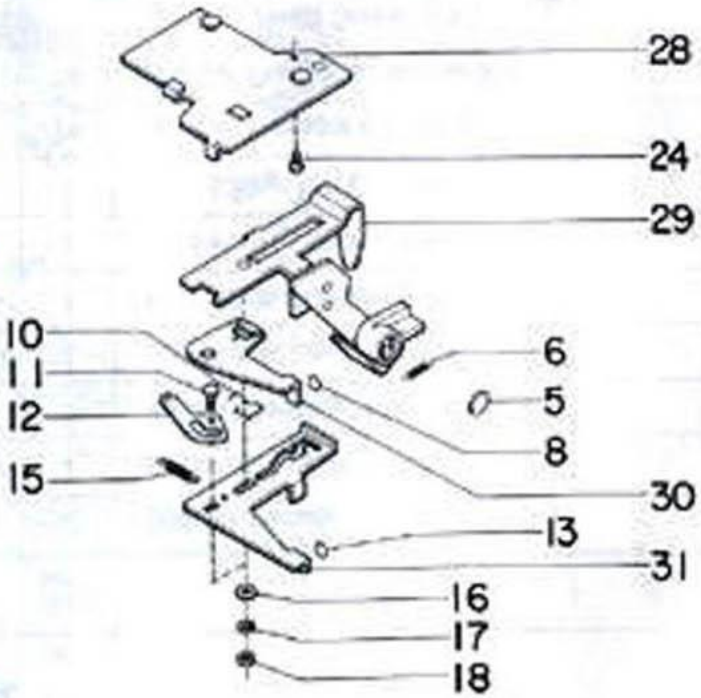
28
24
29
10
11
12
15
6
5
8
30
13
31
16
17
18

Ref. No.	Parts No.	Q'ty/set	Description	Unit Price
1	01323716	1	Swing Plate (L)	
2	01453711	2	Pan Head Screw	
3	01165281	1	Stopper Spring	
4	01135284	1	Shift Rack	
5	01903715	2	Supporting Cam Cap	
6	01893718	2	Supporting Cam Spring	
O	01813716	1	Ribber Joiner (L) Unit	
7	01733716	1	Ribber Joiner (L)	
8	01464007	2	Pile Lever Seal	
9	01413715	1	Pile Lever (L)	
10	01473719	2	Pile Lever Spring	
11	01493717	2	Adjusting Screw	
12	01483718	2	Adjusting Lever	
13	01414002	2	Drop Lever Seal	
14	01383710	1	Drop Lever (L)	
15	01513712	2	Drop Lever Spring	
16	01923713	4	Plain Washer 4 x 12 x 0.8	
17	04862264	4	Spring Washer 2, 4	
18	01626001	4	Hexagonal Nut 2, 4	
19	01103712	1	Shift Pinion	
20	01216001	1	Base for Swing Bearing	

Ref. No.	Parts No.	Q'ty/set	Description
21	01206002	1	Stopper Spring for Swing Handle
22	11203718	1	Swing Bearing
23	01694009	1	Swing Handle Ref. 12498515
24	01503713	2	Pan Head S Tap Tight Screw 3 x 4
25	01423714	1	Indicator Unit
26	06401004	1	Special PW Binding Head Screw 3 x 7
27	01332006	4	Binding Head Screw 3 x 6
28	01313717	1	Swing Plate (R)
O	01803717	1	Ribber Joiner (R) Unit
29	01703719	1	Ribber Joiner (R)
30	01403716	1	Pile Lever (R)
31	01373711	1	Drop Lever (R)
32	01523711	1	Binding Head Screw 3 x 6