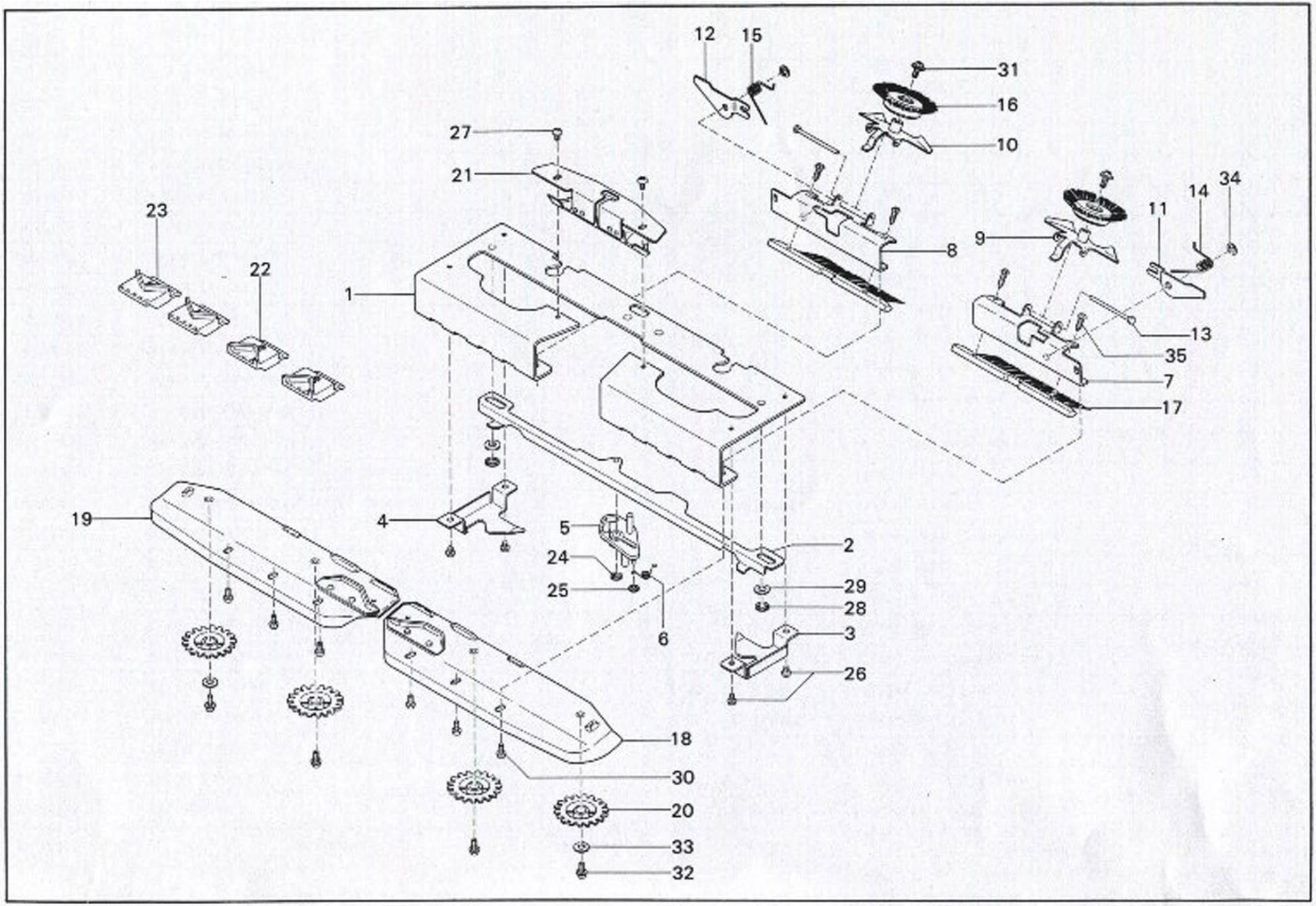
12
15
31
16
10
27
21
23
22
1
8
9
11
14
34
13
35
7
17
19
4
5
24
25
6
2
29
28
3
26
18
30
20
33
32

PARTS LIST FOR AUTOMATIC WEAVING ARM AW-1

Ref. No.	Parts No.	Q'ty	Description	Unit Price
1	09020819	1	AW Arm	
2	09050816	1	AW Sliding Plate	
3	09080813	1	AW Yarn Guide (R)	
4	09090812	1	AW Yarn Guide (L)	
5	09100819	1	AW Centre Cam	
6	09110818	1	AW Centre Cam Spring	
7	16090813	1	Brush Holder No.2 (R)	
8	16100810	1	Brush Holder No.2 (L)	
9	06300818	1	Weaving Brush Base (R)	
10	06310817	1	Weaving Brush Base (L)	
11	09140815	1	AW Weaving Lever Operation Lever (R)	
12	09150814	1	AW Weaving Lever Operation Lever (L)	
13	06210819	2	Weaving Brush Shaft D	
14	06220818	1	Weaving Brush Spring (R)	
15	06230817	1	Weaving Brush Spring (L)	
16	06240816	2	Weaving Brush	
17	09290818	2	Clearing Brush	
18	06060412	1	Fabric Presser (R)	
19	06070411	1	Fabric Presser (L)	
20	06251201	4	Fabric Gear	
21	09160813	1	AW Yarn Feeder	
22	09190810	2	AW Changeover Cam (R)	
23	09200817	2	AW Changeover Cam (L)	
24	08662116	1	E Snap Ring, 3	
25	07571607	1	C S Snap Ring 2	

Ref. No.	Parts No.	Q'ty	Description	Unit Price
26	04782561	4	Pan Head Screw 3 x 3.5	
27	01373109	2	Truss Head Screw 3 x 5	
28	08672115	2	E Snap Ring, 4	
29	08440810	2	Plain Polished Washer 5	
30	01332006	6	Binding Head Screw 3 x 6	
31	06290811	2	Washer Head Screw 3 x 6.5	
32	08030611	4	Washer Head Screw 3 x 5	
33	09330812	2	Plain Washer 6 x 10 x 0.8	
34	08662116	2	E Snap Ring 3	
35	06096002	4	Round Head Tapping Screw 2, 2.3 x 6	
○	09230814	1	Instruction sheet	
○	09350810	1	Caution sheet	
○	09240813	1	Inner Individual Carton Box	